FELTOUCH
Aesthetically Acoustic Solutions!

Feltra
Collection

RECTA

Feltra Collection adds too a decorative room and balances sound especially within office spaces. Feltra is one the best examples of our Fit&Finish concept. Feltra provides smart solutions for space division as free standing furniture while providing acoustic efficiency at the same time.

Specification

- **Composition:** 100 % polyester (recyled PET appx. 50 %)
- **Material Weight:** 1300g / m² (+/- 5 %)
- **Material Thickness:** 6mm (+/- 10 %) & 7mm (+/-10%)
- **Panel Weight:** 120x140cm - 13,8 kg / per pcs. (+/- 5 %)

Performance

- **Acoustic Rates:** 0.59 NRC (EN-11654) with no air gap
- **Fire Rates:** B,S1,d0 (EN-13501)
- **Light fastness:** 6+ (ISO-105 B02)
- **VOC Emmissions:** Low VOC (MAS Certified Green)
  Formaldehyde-free (ISO-14184)
- **Health:** 99.9 % Antibacterial (ISO-20743)
- **Moisture Absorption:** >0.03% by weight
  (50˚C/122˚F at 80 % relative humidity)
- **Thermal insulating:** 0,040 W/mK

Key Features & Benefits

- Available in 2 natural composite colours & 17 Camira Sonus colours
- Highly durable providing long-term stability and performance
- Safe, non-toxic, non-irritant & without red list chemical binders
- Recycled and recyclable

Care

- Easy to clean with a damp cloth or vacuum cleaner
- Indoor use only

Dimensions (cm):

80cmx120cm(h)
90cmx140cm(h)
120cmx120cm(h)
180cmx140cm(h)

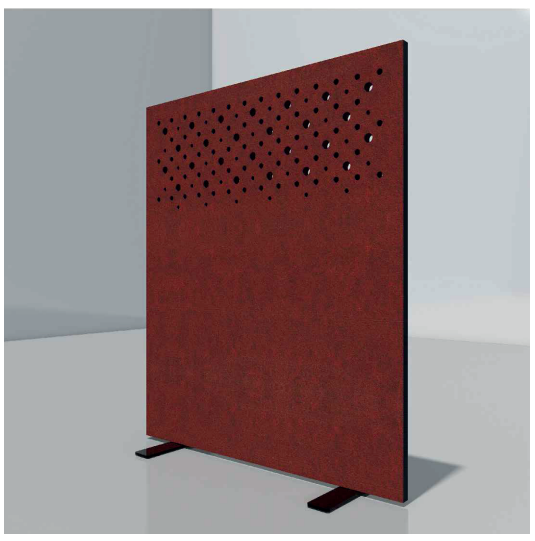

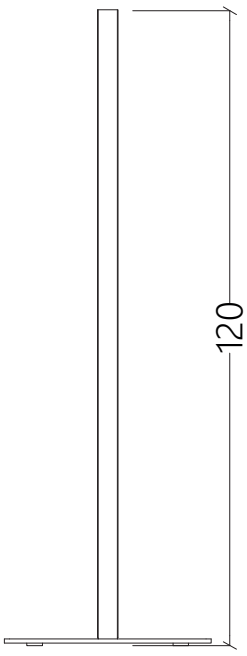

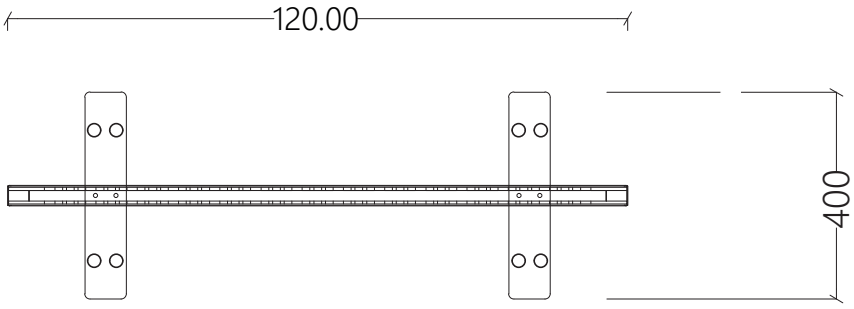
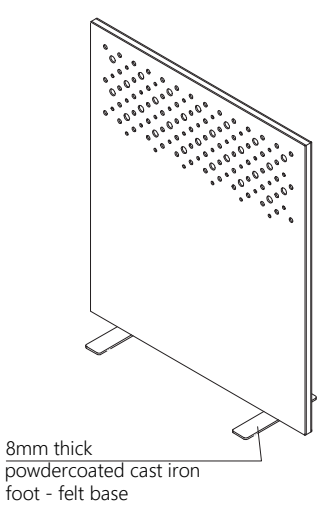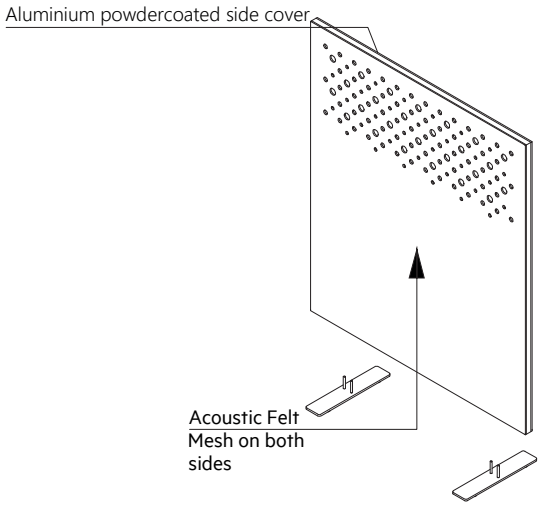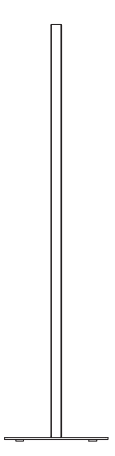
Installation